FRINDEL OPTICS

Supply of Western European Standard Distribution Boxes

Supply of Western European Standard Distribution Boxes

Temporary Power Distribution Boxes for Electrical

Temporary power distribution boxes for flexible electrical installation. Robust solutions for construction sites, events and temporary energy infrastructure.

Contact Us

CE-TEK

CE-TEK Enclosures are designed and manufactured to the latest European standards and are available in a wide range of materials and sizes. The company

Contact Us

Top Distribution Box Supplier for Global Projects

Find certified distribution box suppliers with CE, RoHS, and UL compliance. Compare top manufacturers by customization, IP ratings, and export reach. Click to discover trusted global partners for your

Contact Us

European Cable Distribution Boxes

European Cable Distribution Boxes, Find Details and Price about Cable Distribution Boxes Power Distribution from European Cable Distribution Boxes - Ningbo Tianan Group Co., Ltd.

Contact Us

Distribution boxes , Ahlsell - We make it easier to be pr

All components are well selected from well-known European manufacturers such as Eaton, PCE, Weidmüller etc. The central unit is manufactured to withstand the Nordic outdoor climate for many

Contact Us

Production of electrical distribution boards

We offer to make all kinds of distribution boxes. Starting with small local control panels up to large automation cabinets in accordance with European Union directives - Low Voltage Electric

Contact Us

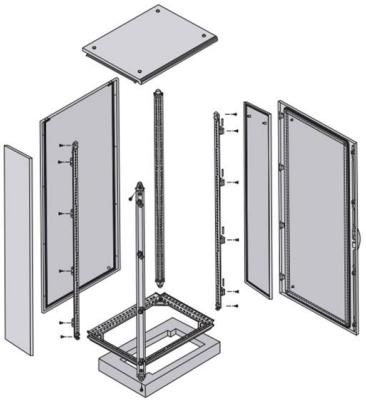

North American versus European distribution systems

Layouts, configurations, and applications Distribution systems around the world have evolved into different forms. The two main designs are North

Contact Us

Distribution boxes - For modular and

decentralised

Modern automation solutions are becoming increasingly decentralised. As a result, you need distribution systems that can be easily integrated into the common

Contact Us

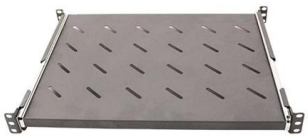

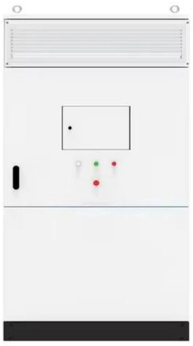

Advantages of Standard Distribution Boxes

Standard distribution boxes improve safety, simplify power management, support expansion, and organize electrical systems efficiently for

Contact Us

Electrical Distribution Boxes for Power Distribution , Wieland

From decentralized energy, signal and data distribution to distribution boxes for smart buildings, we offer the right solution. We mount any electronics in the manifolds! All options are open here, and the

Contact Us

Distribution electrical enclosure, Distribution electrical

Engineered into a standard 1RU footprint that support up to 20A GMT fuses in each position, providing ample capacity for distribution to a broad range of components.

Contact Us

Terminal & Distribution Boxes , Enclosures , BPX

Discover Terminal & Distribution Boxes at BPX. High-quality Enclosures with fast UK delivery and expert UK support for your industrial projects.

Contact Us

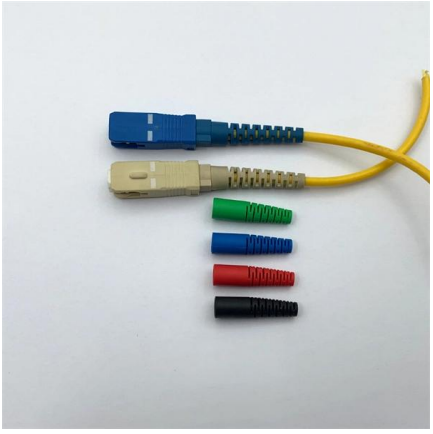

Junction Boxes

Our consultants will find for you the best manufacturers, distributors or service providers for Junction Boxes and will forward your mail request to these companies immediately.

Contact Us

Indoor / Outdoor Distribution Boxes , SENTAL Export

We find what you need. If you lay cables, these must also be distributed. We offer a wide range of street cabinets, as well as indoor and outdoor distribution boxes.

Contact Us

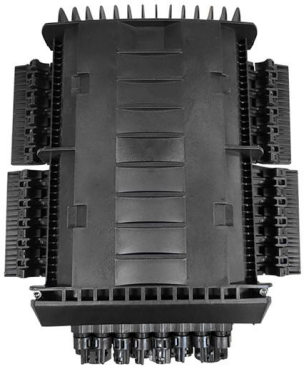

European Standard Distribution Boxes

Types of European Standard Distribution Boxes A European standard distribution box --also known as a consumer unit or distribution board--is a critical component in electrical installations, responsible

Contact Us

GB-distribution box and enclosures

The GB-terminal box, both distribution box and empty enclosure, is manufactured of high impact resistance, glass-fibre reinforced polyester SMC & DMC providing extraordinary stability and

Contact Us

Design requirements and standards for low voltage

Key Takeaways Always prioritize safety by following NEC and IEC standards for low voltage distribution boxes. Check voltage and current ratings to

Contact Us

Electrical distribution box Manufacturer/producer Germany , B2B

B+B Thermo-Technik has been developing and producing innovative product and industry solutions with the highest quality standards for precise measurement tasks since 1984.

Contact Us

GB-distribution boxes and enclosures

All listed GB distribution boxes and empty enclosure have been tested and approved by the BASEEFA authorities according to the latest European Standards. These correspond to the requirements of the

Contact Us

Distribution Box

Distribution Box LAIWO offers a full range of distribution boards and consumer units including metal consumer units, EV garage units, TP& N distribution boards, plastic enclosures and MCB metal

Contact Us

Distribution Boxes , Fibox , ABS Electrical Enclosures I Demesne

Designed and manufactured in Italy, the Euro2000 range of Distribution Boxes offer quality and reliability across the entire range. Suited for a wide variety of applications in the electrical engineering industry.

Contact Us

Decentralized Building Automation Distribution Boxes

Distribution boxes for building automation. Pluggable system solutions for energy-efficient smart buildings with flexible and fast electrical installation.

Contact Us

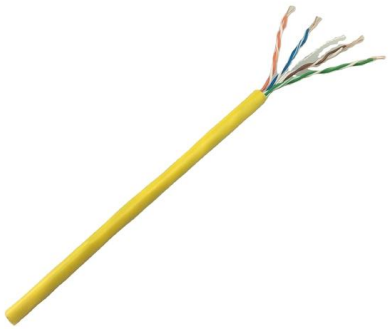

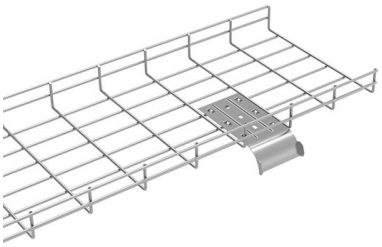

European distribution and delivery services , KWL B.V.

Same-day, next-day, time-bound, special and standard deliveries. Possibilities for weekend and evening deliveries. Delivery with 1 or 2 drivers for oversized, large and special items, including assembly.

Contact Us

Contact Us

For datasheets, pricing, or custom fiber access solutions, please visit: https://frindel.es