FRINDEL OPTICS

Panama Connector Communication Optical Cable

Panama Connector Communication Optical Cable

New converged fiber-optic network improves Panama

The Panama Canal Commission's new ATM network provides constant tracking of transiting vessels through video cameras and global positioning satellites. A fiber

Contact Us

Panama's Optical Fiber Cables Market Report 2026

This report provides a comprehensive view of the optical fiber cables industry in Panama, tracking demand, supply, and trade flows across the national value chain.

Contact Us

Cables de Fibra Optica y Telecomunicaciones - INNOVA TECHNOLOGY PANAMA

Descubre cables de fibra óptica y soluciones avanzadas en telecomunicaciones ideales para tus proyectos tecnológicos. Encuentra calidad y asesoramiento especializado.

Contact Us

Panama City Cabling, Panama City Structured Cabling, Panama City

ATEK Communications now offers the Panama City area Structured Cabling services and the Panama City and South Florida region with professional and certified (BICSI RCDD) cabling technicians to

Contact Us

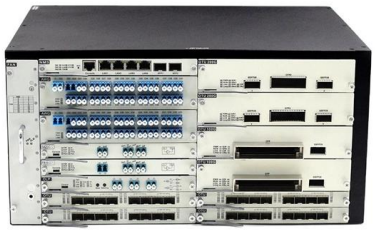

Sparkle Launches Panama Digital Gateway with Trans

About Trans Ocean Network Trans Ocean Network is a Panamanian telecommunications operator that owns, operates and maintains a terrestrial

Contact Us

PaNETma ISP in Panama

PaNETma offers high speed broadband wireless and wired Internet access in Panama at an amazing quality and reasonable price.

Contact Us

Panama Fiber Optic Cable Market (2025-2031) , Revenue & Share

The Panama Fiber Optic Cable Market is projected to witness mixed growth rate patterns during 2025 to 2029. The growth rate begins at 8.99% in 2025, climbs to a high of 11.18% in 2027, and moderates

Contact Us

Fiberlink - Conectividad para Empresas en Panamá

Una Conectividad Inigualable en Todo Panamá Tu socio en conectividad de alta velocidad, con soluciones de fibra óptica seguras y confiables. Contamos con

Contact Us

PLP , Electric power and fiber optic communications

PLP is a worldwide designer, manufacturer and supplier of high quality cable anchoring and control hardware and systems, fiber optic and copper splice

Contact Us

Optical fiber in Panama

Along with the Central American Electrical transmission lines also being installed are thirty-six fiber optic cables, adding internet connectivity via underground lines.

Contact Us

Cable structure

Fiber Optic Cables

Fiber Optic Cables, Adaptors, & Accessories Our extensive offering of fiber optic cables, connectors, cassettes, enclosures, patch cords, cable assemblies, cable

Contact Us

Trade Insight: Panama's Expanding Market for Electrical and Cable

An analytical overview of Panama's imports of electrical connectors (HS 853690000090) from January to June 2025, highlighting trade value, quantity trends, major buyers, suppliers, and

Contact Us

Panama fiber optic cable

About panama fiber optic cable In the modern era of telecommunications, panama fiber optic cable play a pivotal role in ensuring seamless connectivity across various devices and networks. These

Contact Us

Google's Curie cable is on its way to Panama

Google announced not only that the fibre optic cable has been successfully installed and tested but that it is expected to begin transmitting data in the second quarter of 2020. Google says it

Contact Us

Microsoft Word

Trans Ocean Network, directly or indirectly, owns, operates and maintains a terrestrial network of fiber-optic cables in Panama, including rights of way, ducts, beach manholes, bore pipes, and cable

Contact Us

Panama Import English Product Description Fiber Optical Cable

Get Free Export-Import Sample Report Online. Register For Complete Demo Account.

Contact Us

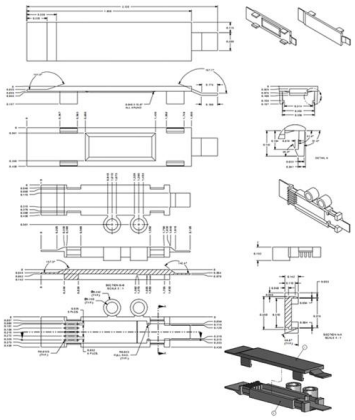

Optical Cables for sale in Panama City, Panama

New and used Optical Cables for sale in Panama City, Panama on Facebook Marketplace. Find great deals and sell your items for free.

Contact Us

Panama's SECRET Fiber Optic Cables UNDER THE SEA

Did you know Panama is home to one of the most critical pieces of global infrastructure? ? Hidden beneath the sea, Panama's fiber optic cables play a vital role in connecting the world. These

Contact Us

Panama's SECRET Fiber Optic Cables UNDER THE SEA

Did you know Panama is home to one of the most critical pieces of global infrastructure? ? Hidden beneath the sea, Panama's fiber optic cables play a vital role in connecting the world. These

Contact Us

Panama fiber optic cable

Discover premium quality panama fiber optic cable designed to enhance connectivity and performance. Ideal for business buyers seeking reliable solutions.

Contact Us

More Fiber Optic Investments in Panama

It also owns the fiber optic cable known as 'Arcos', and has an ownership stake in another major communications cable, the one called Maya. Four major underwater communication cables pass

Contact Us

Panama company to support rollout of Caribbean cable system

Panama-based company Trans Ocean Network has announced that it will provide cable company Ocean Networks with landing party services and infrastructure in the Republic of Panama

Contact Us

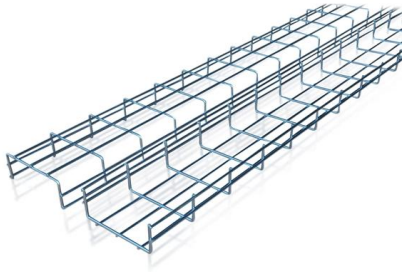

Connect with Verified Fiber Optical Cable Buyers in Panama , Volza

Access 249 verified Fiber Optical Cable buyers in Panama with contact details, shipment history, import pricing & supplier data. Updated through Nov 2025. Start with a free Fiber Optical

Contact Us

New subsea cable connections for Central Americas

Initially the system will connect West Palm Beach (Florida), Balboa (Panama), Cancun (Mexico), and Cartagena (Colombia). The system is designed

Contact Us

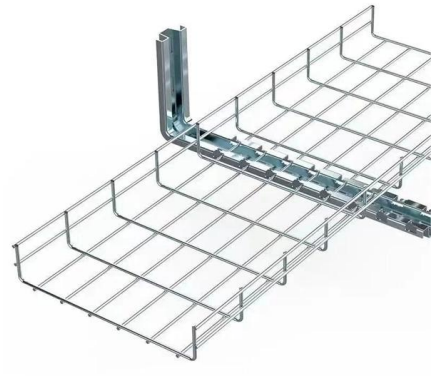

Optical fiber cable Importers in Panama , Buyers & Trade Data

Explore verified Optical fiber cable importers in Panama with customs shipment details, buyers list, and trade data reports for smarter import-export decisions.

Contact Us

Panama's SECRET Fiber Optic Cables UNDER the Sea

Just like the canal connects the Atlantic and Pacific Oceans for trade, Panama's subsea fiber optic cables connect continents for global communication. Stick around to discover how this tiny

Contact Us

Submarine Cable Map

TeleGeography's comprehensive and regularly updated interactive map of the world's major submarine cable systems and landing stations.

Contact Us

Panama accelerates the internet revolution

with fiber

Different internet access technologies are used in Panama, each suitable for specific conditions.
o Fiber optics provide maximum speeds but are

Contact Us

Contact Us

For datasheets, pricing, or custom fiber access solutions, please visit: https://frindel.es