FRINDEL OPTICS

Fiber optic lamp wall panel price

Fiber optic lamp wall panel price

Indoor Wall Mount Fiber Patch Panel , FiberTek

Indoor Wall Mount Fiber Patch Panel can be deployed in an indoor environment by mounting on the wall. It provides a safe and secure mean to store the optical splices.

Contact Us

Wall Mount Fiber Patch Panel , FiberTek

Wall mount fiber patch panel provides secure storage to the optical splices of the fiber optic cables. They can be deployed in both indoor and outdoor environments.

Contact Us

Fiber Optic Patch Panel at Best Price from

Get here lists of fibre optic patch panel, fiber optic patch panel manufacturers, suppliers and exporters. These shown fiber optic patch panel manufacturing

Contact Us

Fiber Optic Wall Mount Enclosures Supplier and Distributor

Century Fiber's fiber optic wall mount enclosures are engineered for accessibility and to protect electrical components in industrial applications.

Contact Us

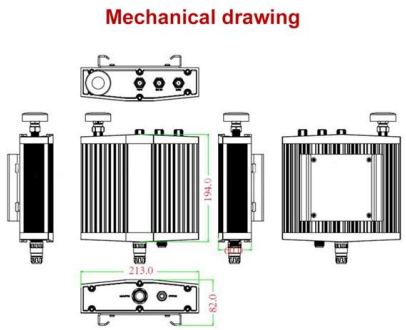

Fiber Optic Patch Panels: 24-48 Port Rack/Wall Mount Solutions

Need reliable fiber optic patch panels? Discover 24-48 port rack/wall mount options with LC/SC connectors. Compare prices from verified suppliers and get fast shipping. Click to browse top-rated

Contact Us

Wall Mount Fiber Patch Panels

Our informative and experienced representatives are ready to assist you with any questions that you might have, regarding your fiber optic network. We offer a superior selection of quality products as

Contact Us

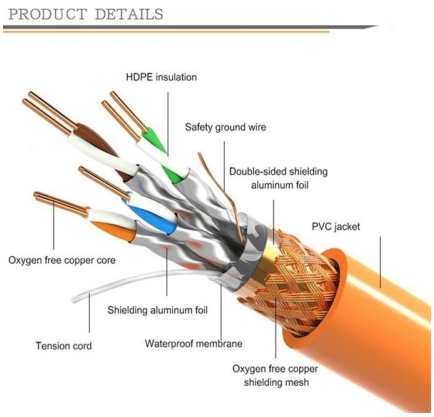

Lucem Light Transmitting Concrete Panels

Lucem is a translucent concrete panel consisting of natural stone and embedded optical fibers in a cement based matrix. The optical fibers allow natural light to be transmitted through the material,

Contact Us

Stainless Steel Wall Plates , opticalCON DUO Fiber Optic

Camplex 1-Gang stainless steel wall plates are available with many different fiber connector options. Mounting holes are countersunk and spaced.

Contact Us

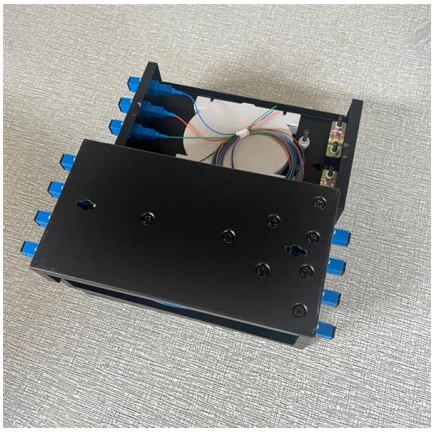

Fiber Optic Patch Panel , Shop at Cables House

Buy premium Fiber Optic Patch Panels - unloaded or pre loaded. Choice of 8, 12 & 24 ports fiber panels for multimode and singlemode fiber cable. Shop now.

Contact Us

Wall Mount Fiber Enclosures

ShowMeCable offers a wide variety of wall mounted fiber optic enclosures, including indoor, outdoor rated, plastic or metal. Applications include: FTTH, FTTB, FTTC, Telecommunication Network,

Contact Us

Fiber Optic Patch Panel

Find here Fiber Optic Patch Panel, Fiber Patch Panel manufacturers, suppliers & exporters in India. Get contact details & address of companies manufacturing and

Contact Us

Amazon : Optical Fibre Lighting

Discover enchanting fiber optic lights for decoration and ambiance. Browse LED lamps, light sources, and optical fiber strands for any project.

Contact Us

Wall Mount Fiber Patch Panels

Wall Mount Fiber Patch Panels You cannot beat the safety, security, and convenience of a Fiber Optic Wall Mount Patch Panel. Keeping your fiber connections organized in a secure and centralized

Contact Us

Fiber Optic Panels

Reserve space for future fiber optic needs with our blank fiber adapter panel. This panel snaps in for easy expansion and compliance with TIA/EIA-568-C.3 standards.

Contact Us

Indoor Wall Mount Fiber Optic Patch Panels FTBT24

FTBT24 series indoor wall mount fiber optic patch panels can be loaded with various adapters SC, LC, FC or ST to provide secure storage for optical splices.

Contact Us

Wall Mount

Unlock the potential of your network infrastructure with SGOPTIC innovative Wall Mount Fiber Patch Panels. Engineered for versatility and reliability, these panels are tailored for environments where

Contact Us

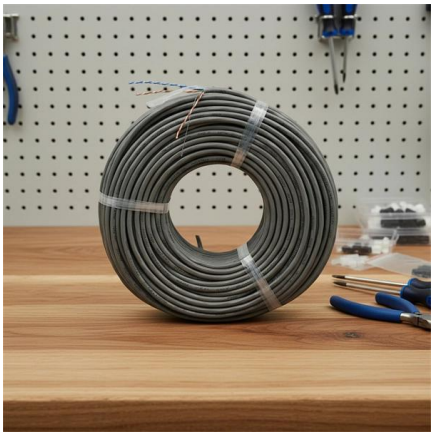

Fiber Optic Patch Panels and Enclosures

Fiber Optic Patch Panels comprise of various products that can support the optical fibers termination or fusion splicing works. They are usually deployed to store

Contact Us

Wall Mount Fiber Optic Patch Panels , Shop Now

Transform your network infrastructure with our premium Wall Mount Fiber Optic Patch Panels and Enclosures. Engineered for seamless integration, these cutting

Contact Us

Indoor Wall Mount Patch Panels

Indoor wall mount patch panel supports direct termination or fusion splicing of the optical fiber. Various fiber optic adapters are supported.

Contact Us

Wall Mount Fiber Patch Panels , RLH

Industries, Inc.

RLH offers a variety of Wall Mount Fiber Patch Panels as well as a large selection of Fiber Adapter Plates, Fiber Pigtails, and Fiber Adapters.

Contact Us

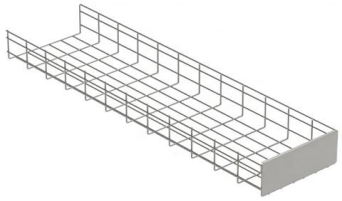

Wall Mount Fiber Patch Panels

These wall mount fiber termination enclosures are crucial to keeping fiber optic networks running smoothly and efficiently because of the roles they play in

Contact Us

Amazon : Fibre Optic Lighting For Ceiling

Transform your space with fiber optic ceiling lighting. Discover RGBW color-changing kits with app and remote control for stunning decorative effects.

Contact Us

Wall Mount Fiber Optic Enclosure , Primus Cable

Wall Mount Fiber Patch Panel Wall Mount Fiber Patch Panels are essential when the concern is safety, security, and accessibility. Fiber connections remain orderly

Contact Us

NEMA Wall Mount Fiber Patch Panels and Enclosures

NEMA Wall Mount Fiber Patch Panel NEMA Wall Mount Fiber Patch Panels provide a concrete basis for any fiber optic application; lucrative aspects include simplified

Contact Us

Wall Mount Fibre Optic Patch Panel

Buy Wall Mount Fibre Optic Patch Panel at the best price from Norden

Contact Us

Contact Us

For datasheets, pricing, or custom fiber access solutions, please visit: https://frindel.es